THE PAPUA NEW GUINEA UNIVERSITY OF TECHNOLOGY

THE DEPARTMENT OF ARCHITECTURE AND CONSTRUCTION MANAGEMENT

SECOND SEMESTER EXAMINATION

BACHELOR OF CONSTRUCTION MANAGEMENT

SECOND YEAR

CM 220 – QUANTITIES & ESTIMATING II

Room:	L2
Date:	Wednesday 2nd November 2022
DURATION:	3 Hours
Time:	12:50 – 4:00 pm

Instructions to Candidates

1. You have 10 minutes to read the paper.
   Do not begin writing during this time.

2. Fill in the Attendance Slip with your name and student I.D. number now

3. **There are four Questions** and you are to **answer all questions**.

4. ALL ANSWERS MUST BE WRITTEN IN THE ANSWER BOOK (S) PROVIDED and ON THE APPENDIX 2 AND 3.

5. Each question must be answered starting on a New Page.

6. Notes and Textbooks are not allowed in the Test Room.
   Only materials allowed and to be brought in by students are;
   - Calculators

WRITE YOUR NAME AND IDENTIFICATION NUMBER CLEARLY ON THE FRONT PAGE. DO IT NOW!

TOTAL MARKS = 100 MARKS

Question One **[45 marks]**

Take off, Abstract and Bill the quantities of the following **items only** from the attached drawings in Appendix 1.

(i) First floor framing (Bearer and Floor joist only) [10 marks]

(ii) Electrical works (Lightings, Switch, GPO only) [15 marks]

(iii) Roof framing (Rafters, Purlins, Fascia board and Barge board only) [20 marks]

Question Two **[10 marks]**

Calculate the all-in-cost of 2400mm x 1200mm x 6mm thick plywood required to construct $1m^2$ of wall.

Data:

(i) Price per 100 plywood ex-works cost K3,850.00
(ii) Delivery to site cost K100.00
(iii) Unloading and stacking i.e. $1^1/_2$ hours labourer @ K5.50
(iv) Waste (breakage and cutting), 10%

Question Three **[32 marks]**

(a) Calculate the labour constant for following item of work; (4 marks)

(i) It takes 5 weeks for a gang of 1 tradesman, 2 trade assistance, 2 skilled labourer and 2 unskilled labourer to construct a concrete slab of five (5) buildings with dimension 40m x 20m wide x 200mm thick each. The strength of the concrete is 20 Mpa. (Note: 1 week = 8hours/day x 5 working days +4hours).

(ii) It takes 10 weeks for a gang of 1 tradesman, 3 trade assistance, 3 skilled labourer and 3 unskilled labourer to construct 40 number of concrete columns of dimension 650mm x 650mm x 3000mmm high. The strength of the concrete is 30 Mpa. (Note: 1 week = 8hours/day x 5 working days +4hours).

(b) Calculate the charge-out-rate of the following operatives by completing the table in Appendix 2. (20 marks)

(i) Tradesman carpenter with an hour rate of K15.00
(ii) Trade Assistance Carpenter with an hour rate of K9.50
(iii) Skilled Labourer with an hour rate of K7.50
(iv) Unskilled labourer with an hour rate of K6.50

(c) Calculate the gang cost of; (4 marks)

(i) Question 3 (a) (i)
(ii) Question 3 (a) (ii)

(d) Calculate the labour cost for constructing; (4 marks)

(i) Concrete slab in Question 3 ((a) (i)) using charge out rate in Question 3 (b)
(ii) Concrete beams in Question 3 ((a) (ii)) using charge out rate in Question 3 (b)

Question Four **[13 marks]**

Calculate the hourly cost of owning and operating a concrete mixer by completing the table in Appendix 3 based on the following data;

Purchase price = K40,000
Hours worked per annum = 1100
Fuel @K4.70 per litre
Life of mixer = 4 years
working efficiency = 85%
Lubricant oil, grease @ K7.50 per litre

Appendix 1

Attached Drawing

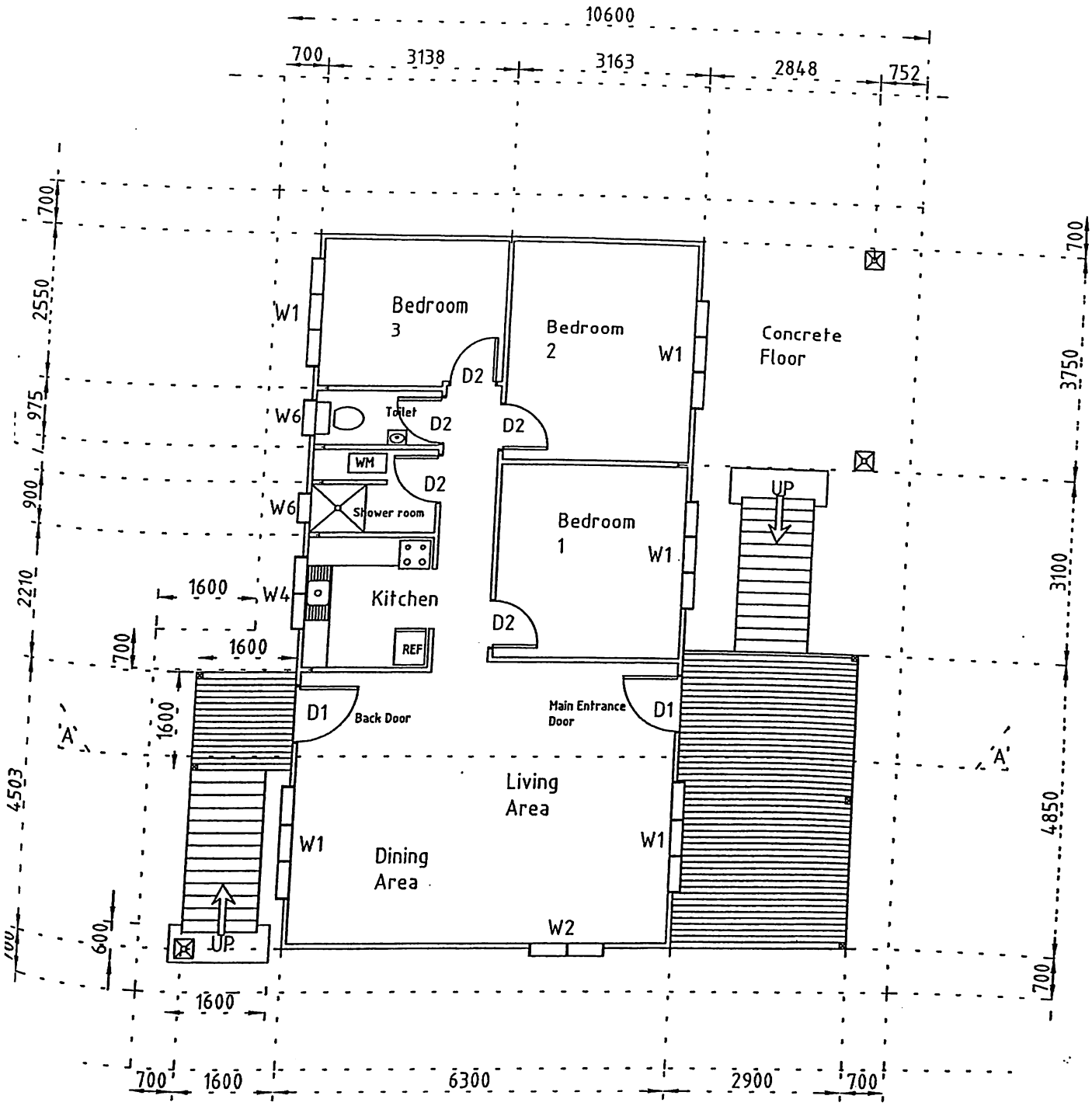

First Floor Plan
Scale 1:100

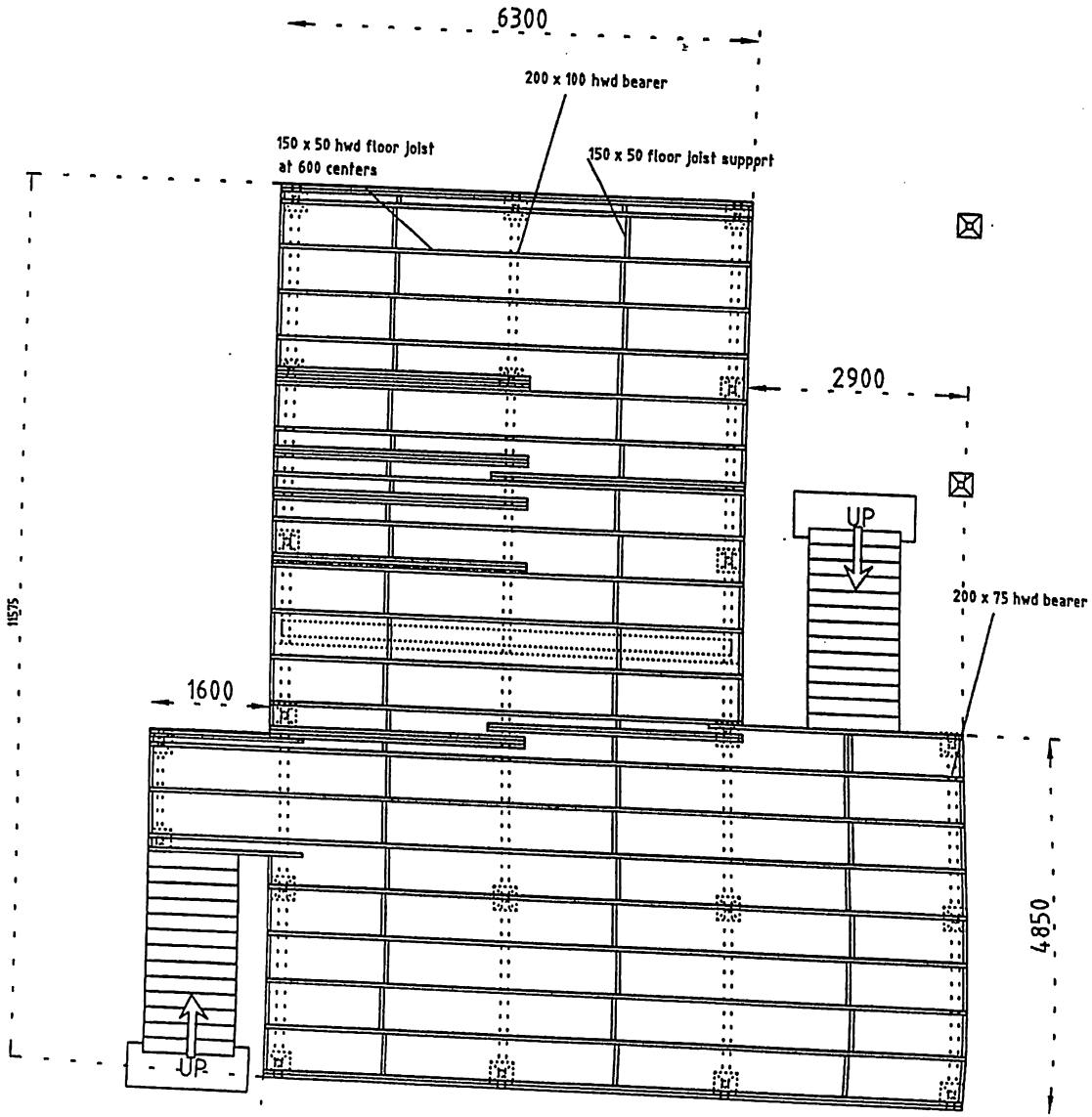
6300
200 x 100 hwd bearer
150 x 50 hwd floor joist
at 600 centers
150 x 50 floor joist suppprt
2900
UP
200 x 75 hwd bearer
1600
11575
4850
UP

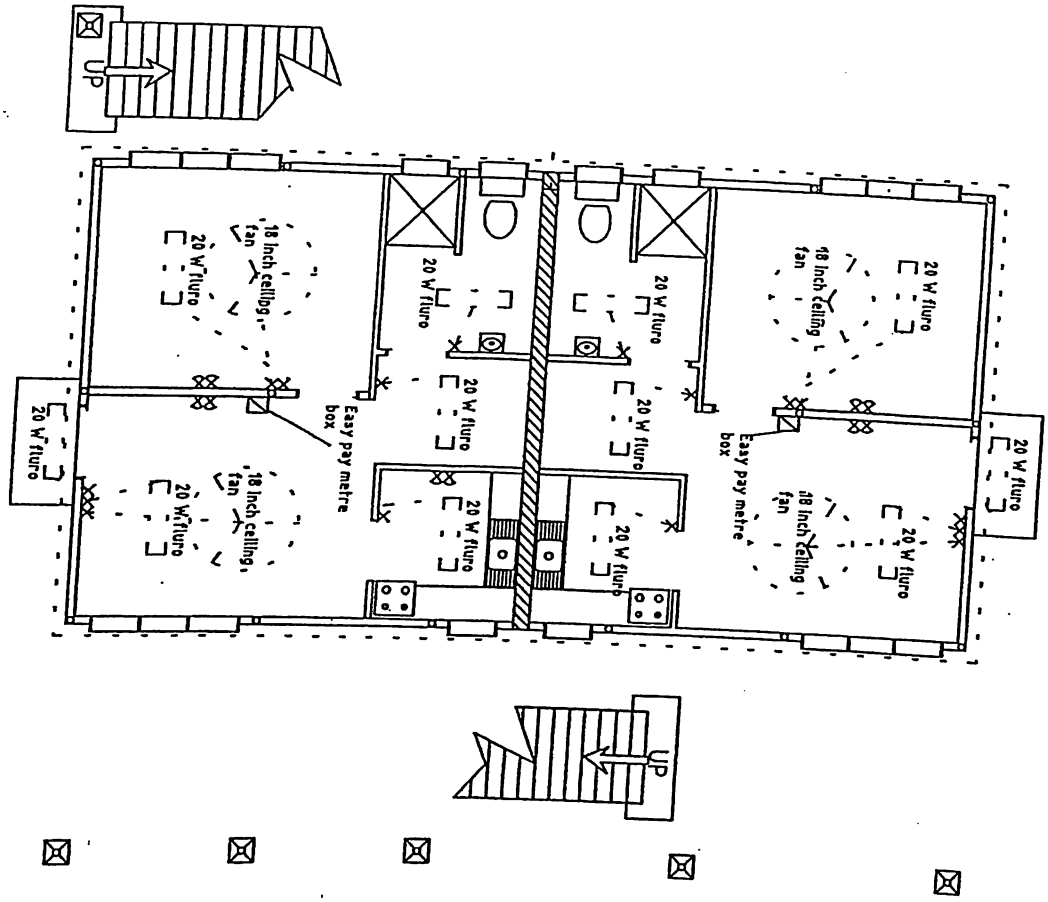
UP
18 Inch ceiling fan
20 W fluro
Easy pay metre box
UP

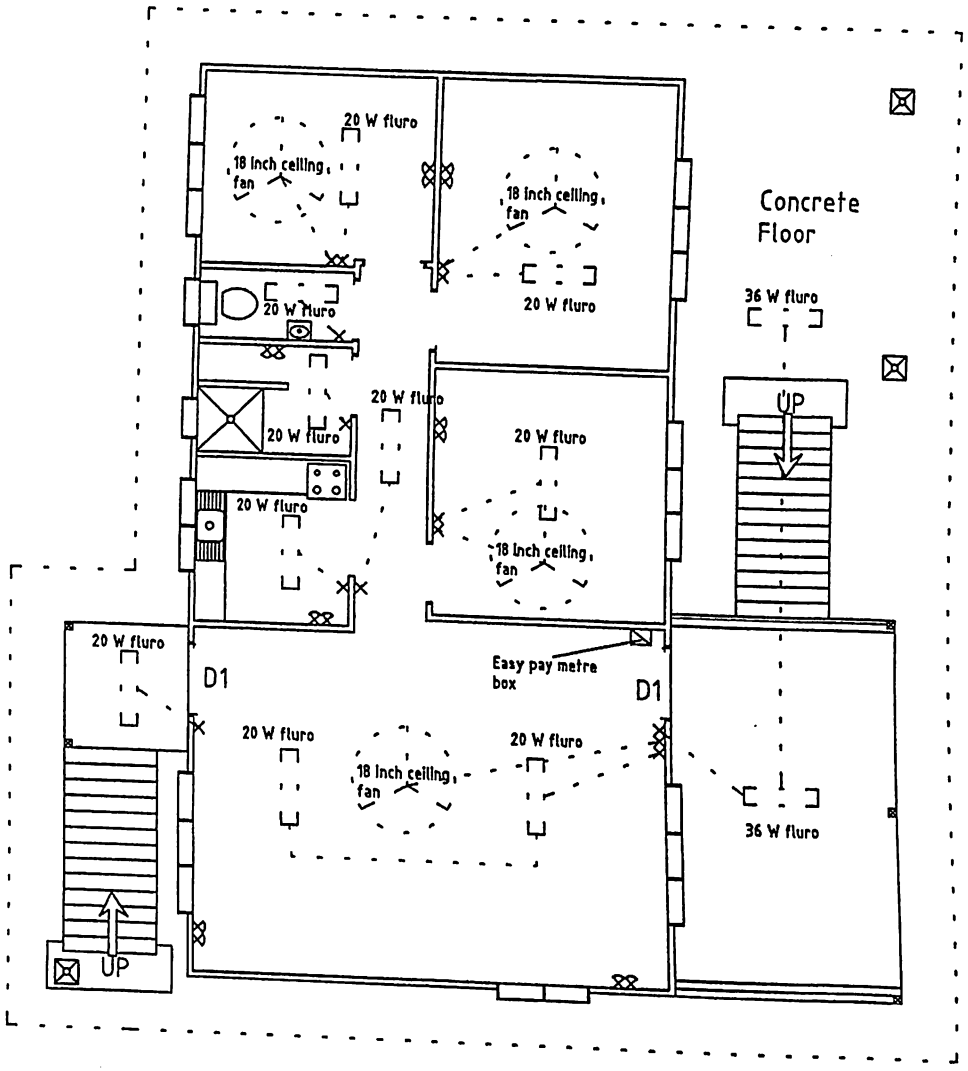
20 W fluro
18 inch ceiling fan
18 inch ceiling fan
Concrete Floor
20 W fluro
36 W fluro
20 W fluro
UP
20 W fluro
20 W fluro
20 W fluro
20 W fluro
18 inch ceiling fan
20 W fluro
D1
Easy pay metre box
D1
20 W fluro
20 W fluro
18 inch ceiling fan
36 W fluro
UP

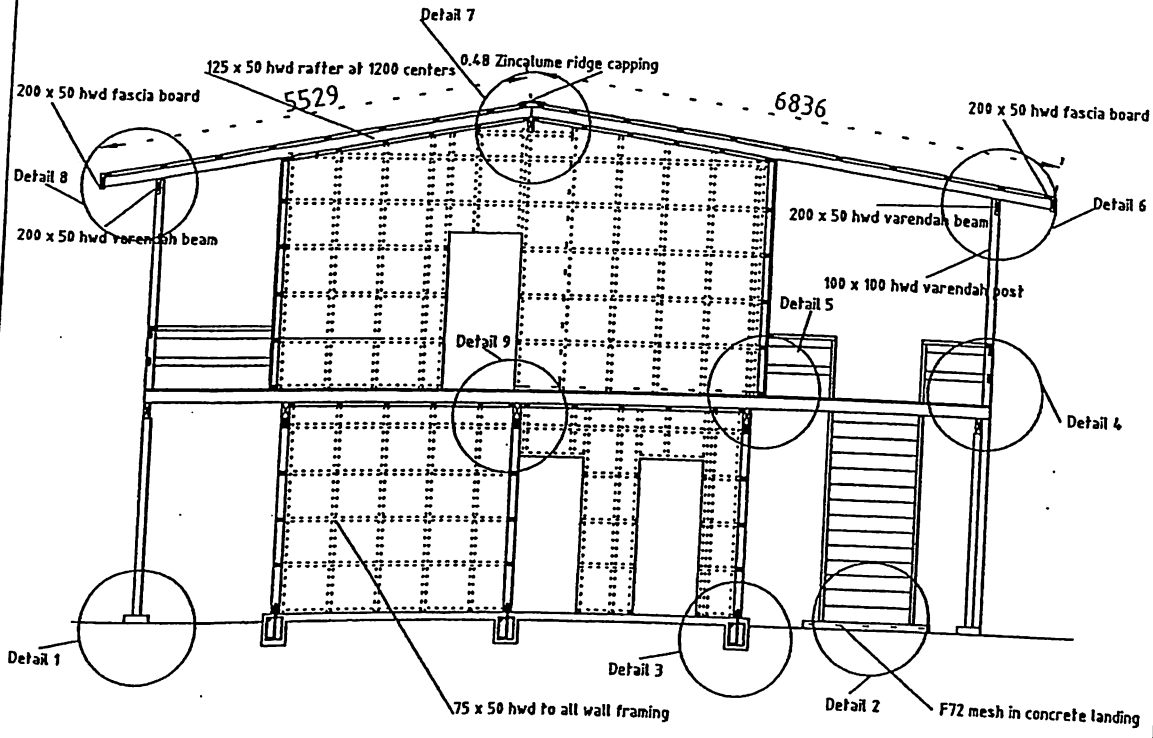

CROSS SECTION A-A
SCALE 1:100

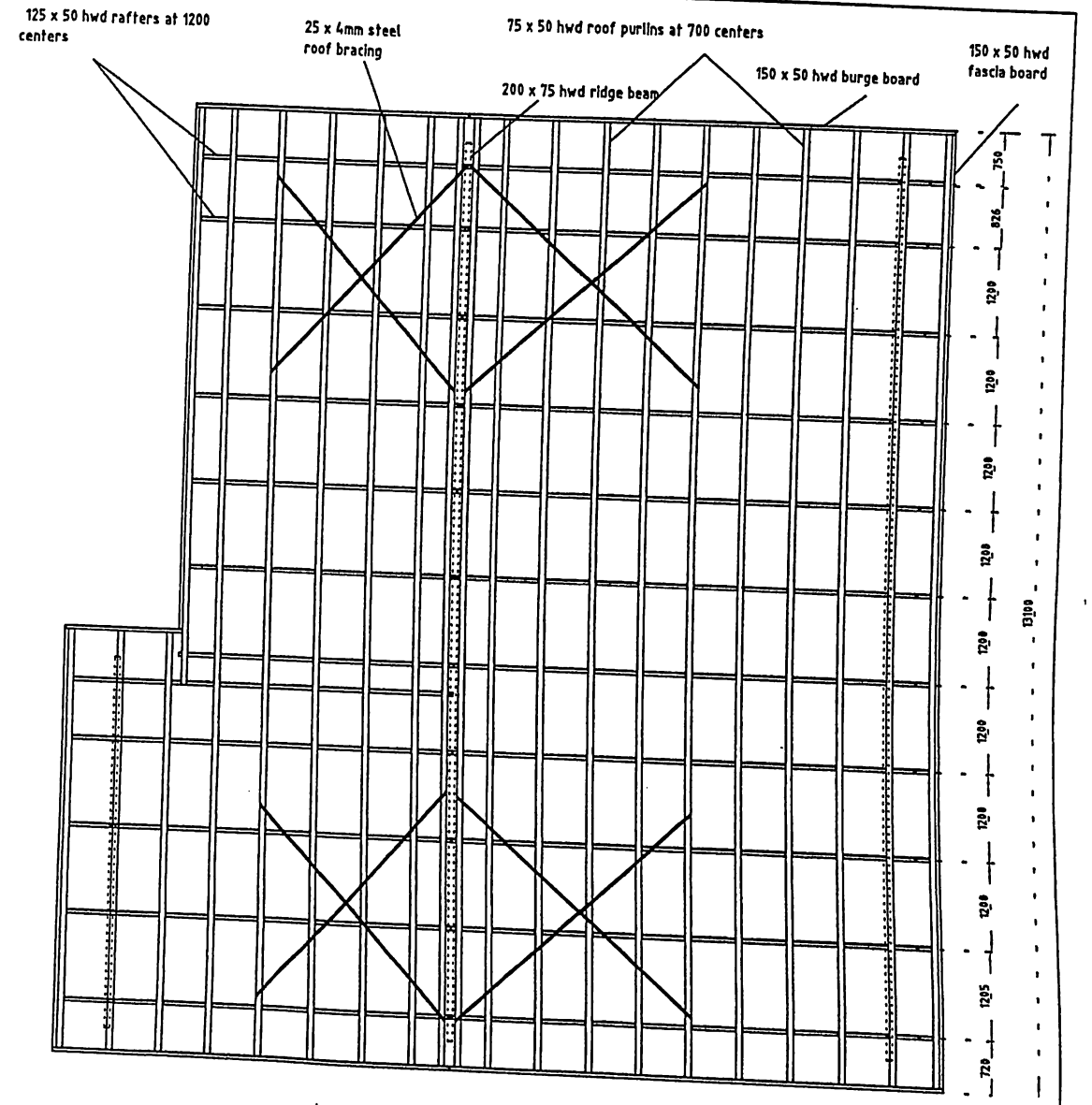
125 x 50 hwd rafters at 1200 centers
25 x 4mm steel roof bracing
75 x 50 hwd roof purlins at 700 centers
200 x 75 hwd ridge beam
150 x 50 hwd burge board
150 x 50 hwd fascia board
750
825
1200
1200
1200

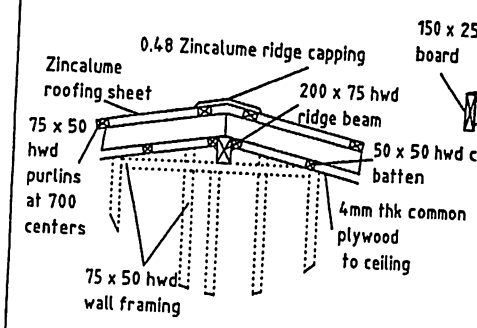

Detail 7

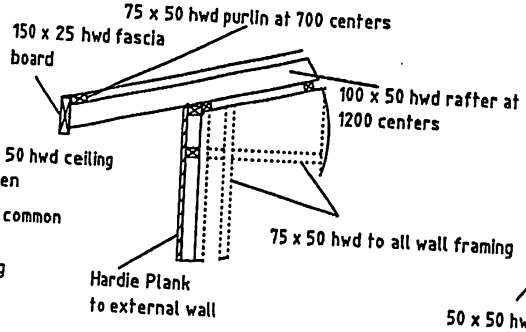

Detail 8

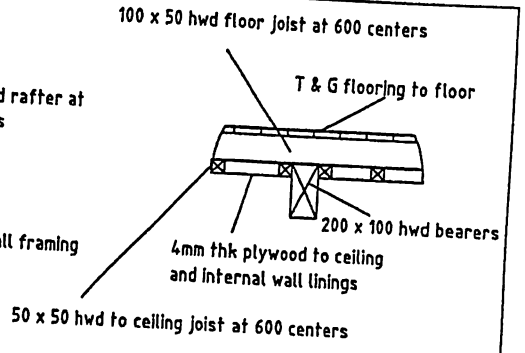

Detail 9

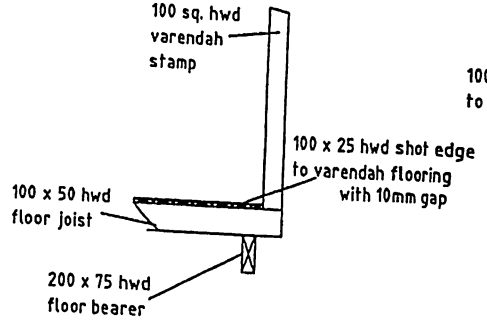

Detail 4

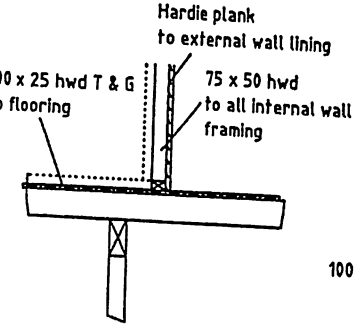

Detail 5

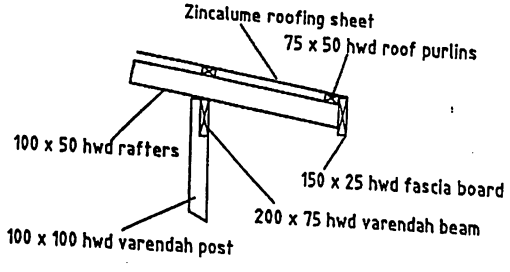

Detail 6

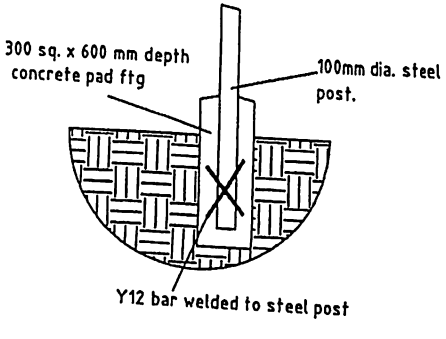

Detail 1

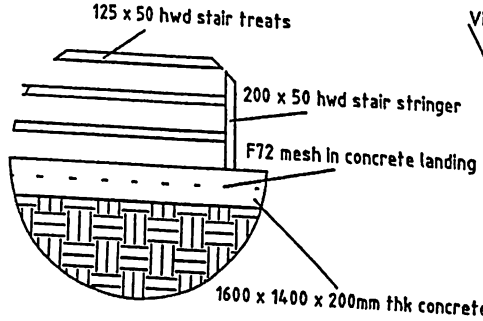

Detail 2

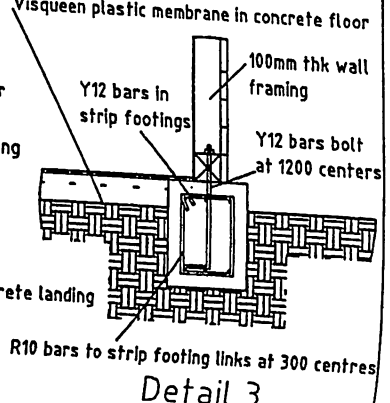

Detail 3

Appendix 2 [20 Marks]

Calculate the charge-out-rate of the following person

TRADE:	Carpenter		Trade Assistance	Skilled labourer	Unskilled labourer
HOUR RATE:					
Wages per 42 hour week = K					
Total annual wage = week wage x 52					
Add for workers compensation 3 % = K					
TOTAL WAGE COST PER ANNUM = K					
TOTAL WORKING HOURS PER ANNUM = 42 X 52 =	2184	Hrs	2184	2184	2184
DEDUCTIONS					
Wet weather allowance, 2% =	43.68	Hrs	43.68	43.68	43.68
nnual Leave, 3 weeks =	126	Hrs	126	126	126
ublic Holiday, 1 week =	42	Hrs	42	42	42
ck Pay, 1 week =	42	Hrs	42	42	42
mpassionate leave (That is 24 hrs) =	24	Hrs	24	24	24
st Pause, 2% =	43.68	Hrs	43.68	43.68	43.68
ng Service leave, 3% =	65.52	Hrs	65.52	65.52	65.52
TAL DEDUC TIONS =	386.88	Hrs	386.88	386.88	386.88
Y =	387	Hrs	387	387	387
TUAL HOURS WORKS WORKED PER ANNUM =	1797	Hrs	1797	1797	1797
URLY COST = TOTAL COST / ACTUAL HRS =					
OWANCE FOR OVERHEADS AND PROFITS					
rly Rate =					
allowance for Overheads					
-TOTALS =					
allowance for profit					
L RATE TO INCLUDE ALL ITEMS - CHARGE OUT RATE =					

Appendix 3 [10 Marks]

Calculate the hourly cost of Owning and operating a concrete mixer based on the following data:

Purchase price _____

Interest rate X %

Life of mixer _____ years

Scrap value at end of life Nil

Hours worked per annum _____ hours

Working efficiency _____

Cost of Owning

Annual depreciation =_____ ----------> _____

Interest on capital, Total repayment is K50,000 _____ ----------> _____

Repairs and maintenance, 20% of annual depreciation ----------> _____

Annual Cost of Owning ----------> _____

Hourly Cost of owning ----------> _____

Operating Cost

Fuel per 8-hr day, say 7 litres @ K____ = _____

Lubricating Oil, grease, say 5 litres per week, = 5 litres @ K_____

Therefore, Lubricants per day of 5 working days = _____

Lubricate and fuel per day = _____

Fuel and Lubricant per hour of the 8 hours = ----------> _____

Total ----->

Working efficiency= _____

Therefore All-in-cost per hour is ----------> [ ]